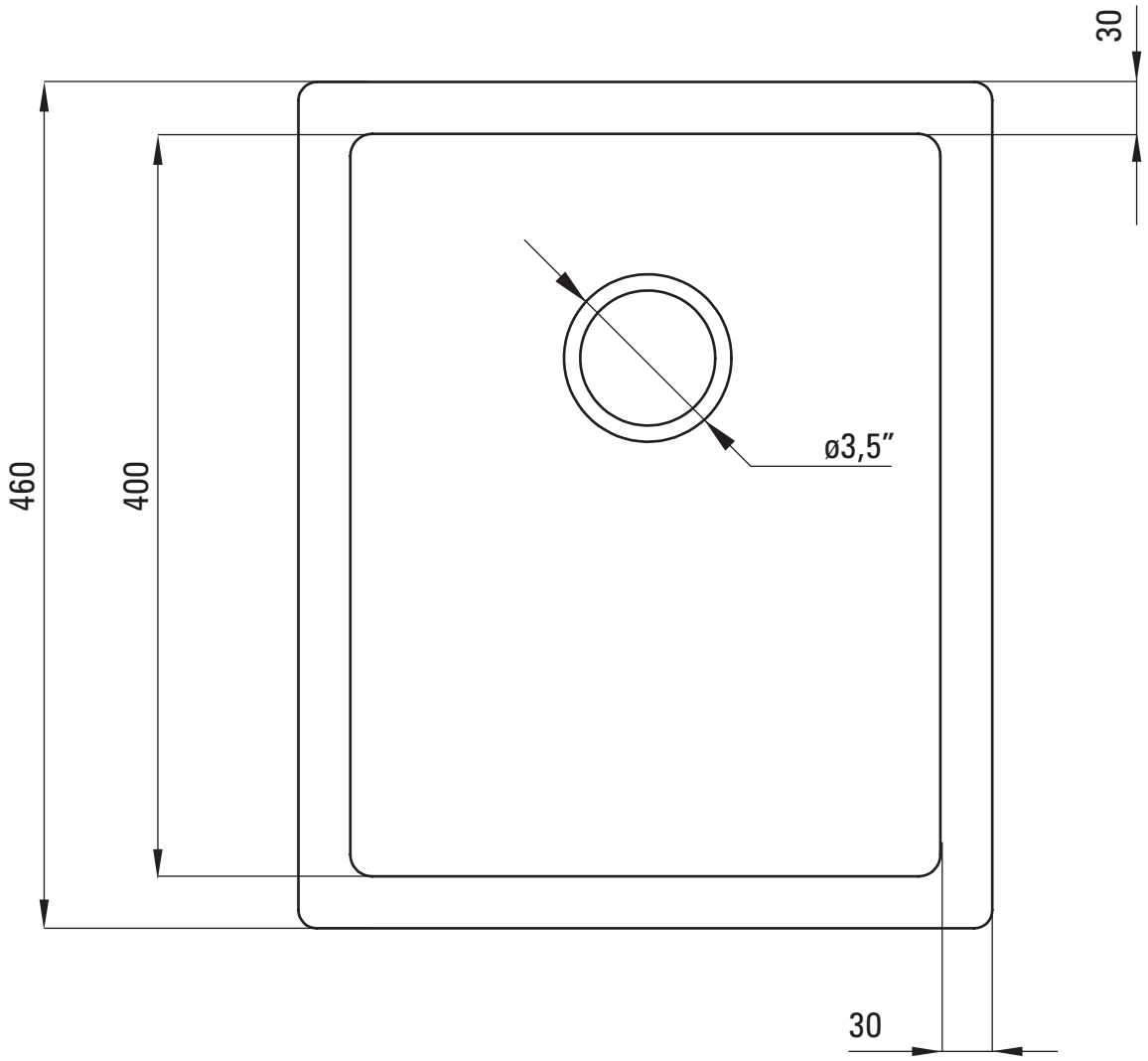
30
460
400
ø3,5"
30

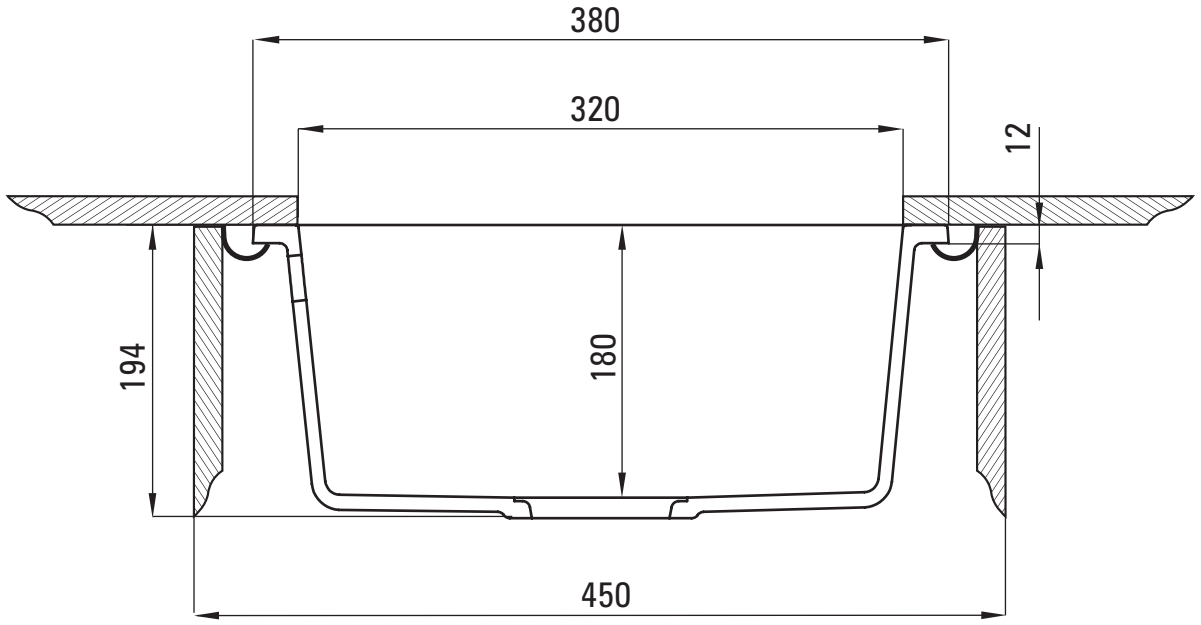
380
320
12
194
180
450